Brushless DC-Servomotors 190 mNm

2 Pole Technology 232 W

Series 4490 ... B

Values at 22°C and nominal voltage		4490 H	024 B	036 B	048 B	
1 Nominal voltage	U_N		24	36	48	V
2 Terminal resistance, phase-phase	R		0,22	0,44	0,7	Ω
3 Efficiency, max.	$\eta_{max.}$		87	87	87	%
4 No-load speed	n_0		9 700	10 400	10 800	min^{-1}
5 No-load current, typ. (with shaft ø 6 mm)	I_0		0,527	0,397	0,317	A
6 Stall torque	M_H		2 635	2 760	2 978	mNm
7 Friction torque, static	C_0		4,96	4,96	4,96	mNm
8 Friction torque, dynamic	C_V		$7{,}72 \cdot 10^{-4}$	$7{,}72 \cdot 10^{-4}$	$7{,}72 \cdot 10^{-4}$	mNm/min^{-1}
9 Speed constant	k_n		395	283	220	min^{-1}/V
10 Back-EMF constant	k_E		2,53	3,54	4,56	mV/min^{-1}
11 Torque constant	k_M		24,2	33,8	43,5	mNm/A
12 Current constant	k_I		0,041	0,03	0,023	A/mNm
13 Slope of n-M curve	$\Delta n/\Delta M$		3,6	3,7	3,5	min^{-1}/mNm
14 Terminal inductance, phase-phase	L		73	142	235	µH
15 Mechanical time constant	τ_m		4,9	5	4,8	ms
16 Rotor inertia	J		130	130	130	gcm^2
17 Angular acceleration	$\alpha_{max.}$		203	212	229	$\cdot 10^3 rad/s^2$
18 Thermal resistance	R_{th1} / R_{th2}	0,96 / 3,9				K/W
19 Thermal time constant	τ_{w1} / τ_{w2}	23 / 1 222				s
20 Operating temperature range:						
– motor		-30 ... +125				°C
– winding, max. permissible		+125				°C
21 Shaft bearings		ball bearings, preloaded				
22 Shaft load max.:						
– with shaft diameter		6				mm
– radial at 3 000 min^{-1} (5 mm from mounting flange)		113				N
– axial at 3 000 min^{-1} (push only)		45				N
– axial at standstill (push only)		135				N
23 Shaft play:						
– radial	≤	0,015				mm
– axial	=	0				mm
24 Housing material		aluminium, black anodized				
25 Mass		742				g
26 Direction of rotation		electronically reversible				
27 Speed up to	$n_{max.}$	18 000				min^{-1}
28 Number of pole pairs		1				
29 Hall sensors		digital				
30 Magnet material		NdFeB				

Rated values for continuous operation						
31 Rated torque	M_N		148	139	137	mNm
32 Rated current (thermal limit)	I_N		7,45	5,06	3,91	A
33 Rated speed	n_N		9 650	10 470	10 930	min^{-1}

Note: Rated values are calculated with nominal voltage and at a 22°C ambient temperature. The R_{th2} value has been reduced by 25%.

Note:

The diagram indicates the recommended speed in relation to the available torque at the output shaft for a given ambient temperature of 22°C.

The diagram shows the motor in a completely insulated as well as thermally coupled condition (R_{th2} 50% reduced).

The nominal voltage (U_N) curve shows the operating point at nominal voltage in the insulated and thermally coupled condition. Any points of operation above the curve at nominal voltage will require a higher operating voltage. Any points below the nominal voltage curve will require less voltage.

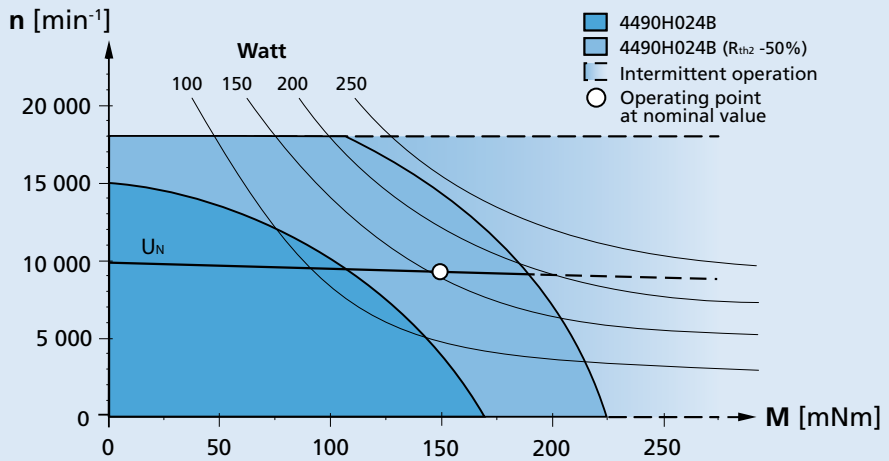

Recommended operation areas (example: nominal voltage 24 V)

For notes on technical data and lifetime performance refer to "Technical Information".

Dimensional drawing

Scale reduced

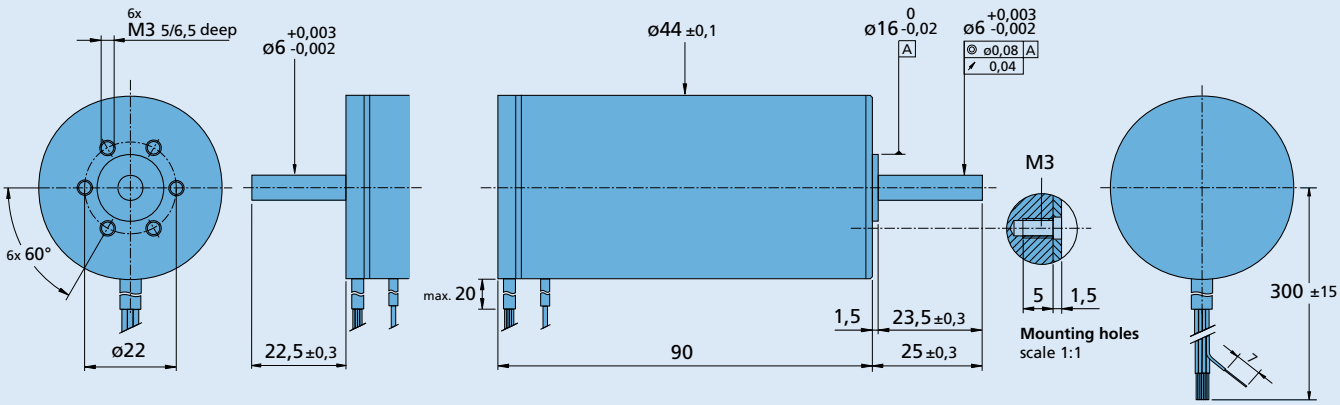

4490 H ... B - K312 **4490 H ... B**

Option, cable and connection information

Example product designation: **4490H024B-K1155**

Option	Type	Description
K1155	Controller combination	Analog Hall sensors for combination with Motion Controller MCBL
K1026	Sensorless	Motor without Hall sensors
K1838	Encoder combination	Motor with rear end shaft for combination with Encoder IE3
K312	Encoder combination	Motor with rear end shaft for combination with Encoder HEDS/HEDL/HEDM
K179	Bearing lubrication	For vacuum of 10^{-5} Pa @ 22°C

Connection

Function	Colour
Phase C	yellow
Phase B	orange
Phase A	brown
GND	black
U_{DD} (+5V)	red
Hall sensor C	grey
Hall sensor B	blue
Hall sensor A	green

Standard cable

Single wires, material PTFE

AWG 16: Phase A/B/C

AWG 26: Hall A/B/C, U_{DD}, GND

Product combination

Precision Gearheads / Lead Screws	Encoders	Drive Electronics	Cables / Accessories
38A 44/1	HEDS 5500 IE3-1024 IE3-1024 L HEDL 5540	SC 5004 SC 5008 MC 5010 MCBL 3006	MBZ To view our large range of accessory parts, please refer to the “Accessories” chapter.

For notes on technical data and lifetime performance refer to “Technical Information”.